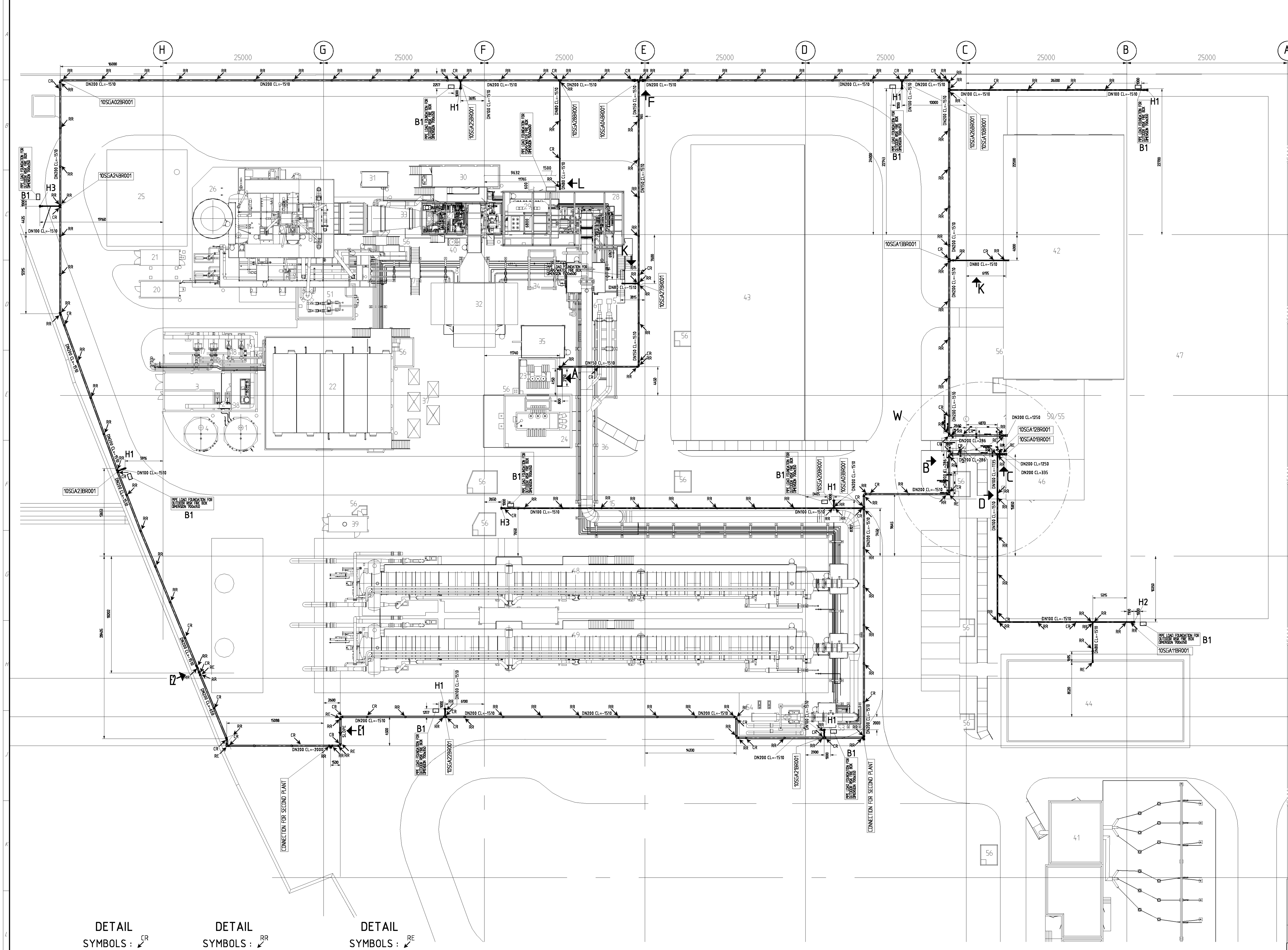

LEGEND

1	10GHC10BB001	DEMIN. WATER TANK
2	10GHC11/12AP001	DEMIN. WATER PUMPS
3	10GHC10	DEMIN. WATER UNIT
4	10GCK10BB001	DESTILLATE STORAGE TANK
5	10MAN10AA101	HP BYPASS STATION
6	10MAN80AA101	LP BYPASS STATION
7	10LBA15BR001	HP MAIN STEAM PIPE
8	10LBA85BR001	LP MAIN STEAM PIPE
9	10LCM10BB001	CLEAN DRAINS FLASH TANK
10	10LCM11/12AP001	CLEAN DRAINS PUMP
11	10NAA11BR001	DRAINS HOTWELL
12	10LCM81/82AP001	VACUUM DRAINS PUMP
13	10MAL10BB001	STEAM TURBINE DRAINS TANK
14	10MAL11/12AP001	STEAM TURBINE DRAINS PUMP
15	10NAA10BR004	PROCESS STEAM PIPE
16	10PCC11/12AP001	SERVICE COOLING WATER BOOSTER PUMPS
17	10PGB21/22AC001	CLOSED COOLING WATER HEAT EXCHANGER
18	10PGB11/12AP001	CLOSED COOLING WATER PUPMS
19	10PGB47BB001	CCW EXPANSION TANK
20	10QCC/10QCD	CHEMICAL DOSING SYSTEM
21	10QU	SAMPLING SYSTEM
22	UBA	POWER CONTROL CONTAINER
23	BBT01	AUXILIARY TRANSFORMER
24	BAT01	MAIN TRANSFORMER
25	UTH	AUXILIARY BOILER
26	UHA	HRSG
27	UMB	GAS TURBINE
28	UMA	STEAM TURBINE BUILDING
29	MKA	GENERATOR
30		GASTURBINE AUXILIARIES
31	SGJ	CO2 FIRE FIGHT SYSTEM
32	MBL	AIR INTAKE SYSTEM
33	MBR	EXHAUST GAS SYSTEM
34	BAA	GENERATOR LEADS
35	BAC	GENERATOR CIRQUIT BREAKER
36	UMY	PIPE BRIDGE
37	BFT	AUXILIARY TRANSFORMER
38	SCA	COMPRESSED AIR SYSTEM
39	BD	EMERGENCY DIESEL UNIT
40	MBA18	COMPRESSOR WASH WATER PACKAGE
41	UAA	HV SWITCHYARD BUILDING
42	UST	WORKSHOP AND STORES BUILDING
43	UTX	GAS COMPRESSOR
44	UYC	ADMINISTRATION BUILDING
45	UYA	GUEST HOUSE/WASH ROOMS/LOCKERS
46	10UGX	DESALINATION PLANT (RE-MINERALIZATION)
47	10UGX01	POTABLE WATER TANK 15000 m3
48	11UGX	DESALINATION PLANT (UNIT A)
49	12UGX	DESALINATION PLANT (UNIT B)
50	SGA	FIRE FIGHTING SYSTEM
51	ULS10	PIT FOR BOILER FLASH TANK
52	ULS20	PIT FOR MAL+LCM10
53	ULS30	PIT FOR LCM80
54	NAD	DUMP CONDENSER
55	UGG	POTABLE WATER PUMP HOUSE
56	UBS	CABLE PULLING PITS
57	USU	CHEMICAL STORAGE BUILDING
58	URX	FINE FILTRATION UNIT

10,00 m TOP OF PIPE LOAD FOUNDATIONS IS AT +5,896 m ABOVE CHART DATUM

NOTE:

THE FIRE FIGHTING HYDRANT RING MAIN PIPES ABOVE THE SOIL HAVE TO RUN FROM FLANGES TO THE SOIL BONDING WITHOUT BANDAGE.

REFERENCE DRAWINGS:

PAK205-XH01-UZ-0002 (SECTIONS & DETAILS PLAN)
PAK205-UE00-SGA-0026 (GENERAL LAYOUT / PLOT PLAN)
PAK205-XG02-SGA-551001 (P&I DIAGRAM)

DETAIL
SYMBOLS : CR
CLAMPING RING

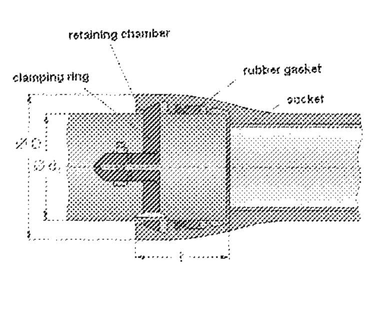

DETAIL
SYMBOLS : RR
RETAINING RING

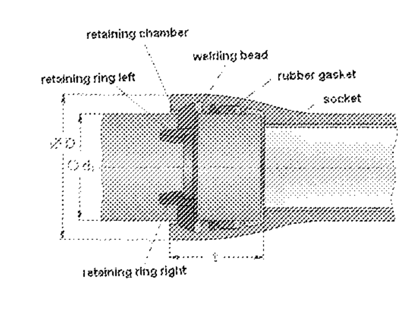

DETAIL
SYMBOLS : RE
RESTRAINED SAFETY DEVICE

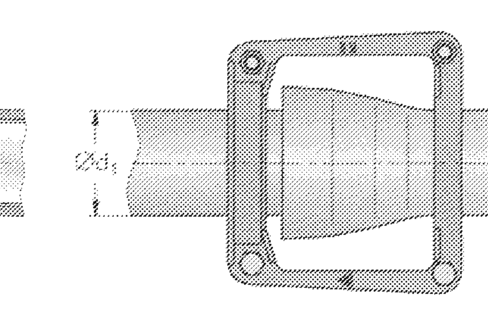

Index Rev.	Datum Date	gezeichn. Drawn	bearb. Coord.	geprüft Checked	Änderungshinweis/Details of Revision
C	2007-02-21	BÖTTCHER	KIESOW	TECKENBURG	BUILDING INLET FOR ADMIN. BUILDING CHANGED
B	2006-08-08	KIESOW	KIESOW	TECKENBURG	PIPINGS REMOVED ACC. EMAIL SAG/MIN/0049 DATED 2006-07-25
A	2006-06-13	KIESOW	KIESOW	TECKENBURG	RELEASED FOR CONSTRUCTION ACC. EMAIL SAG/MIN/0024 DATED 2006-06-13
-	2006-04-21	UENEN	KIESOW	TECKENBURG	FIRST ISSUE

DCL
DHA Cogen Ltd

Ursprung-Nr./Original-No.: PAK205-UE00-SGA-0026
Urspr.-PKZ-Nr. Orig.-PC

Projekt/Project: DHA Power and Desalination Plant, Karachi, Pakistan
PKZ/PC: PAK205
UA Type of Doc.: XH01
Maßstab Scale: 1:200

	Datum Date	Name
gezeich. Drawn	2006-04-21	UENEN
bearb. Coord.	2006-04-21	KIESOW
geprüft Checked	2006-04-21	TECKENBURG
Abtlg. Dept.		

Benennung/Title:
FIRE FIGHTING SYSTEM
OUTDOOR HYDRANT SYSTEM 00SGA10
UNDERGROUND RING MAIN
LAYOUT

Inhaltskennzeichen Contents Code: UZ
Zähl.-Nr. Reg.No.: 0001
Index/Rev.: C
Version

Siemens AG
Power Generation
Dienstst./Dept.: 1541
UNID

PAK205-XH01-UZ-0001
Erstellt mit: AutoCAD
Blatt-Nr./Page-No.: 1/1

Ersetzt durch Superseded by
Ersatz für Supersedes
Minimax Drawing No.

MINIMAX
PROTECTING YOU FROM FIRE

Made nicht abgetastet/Not to Scale